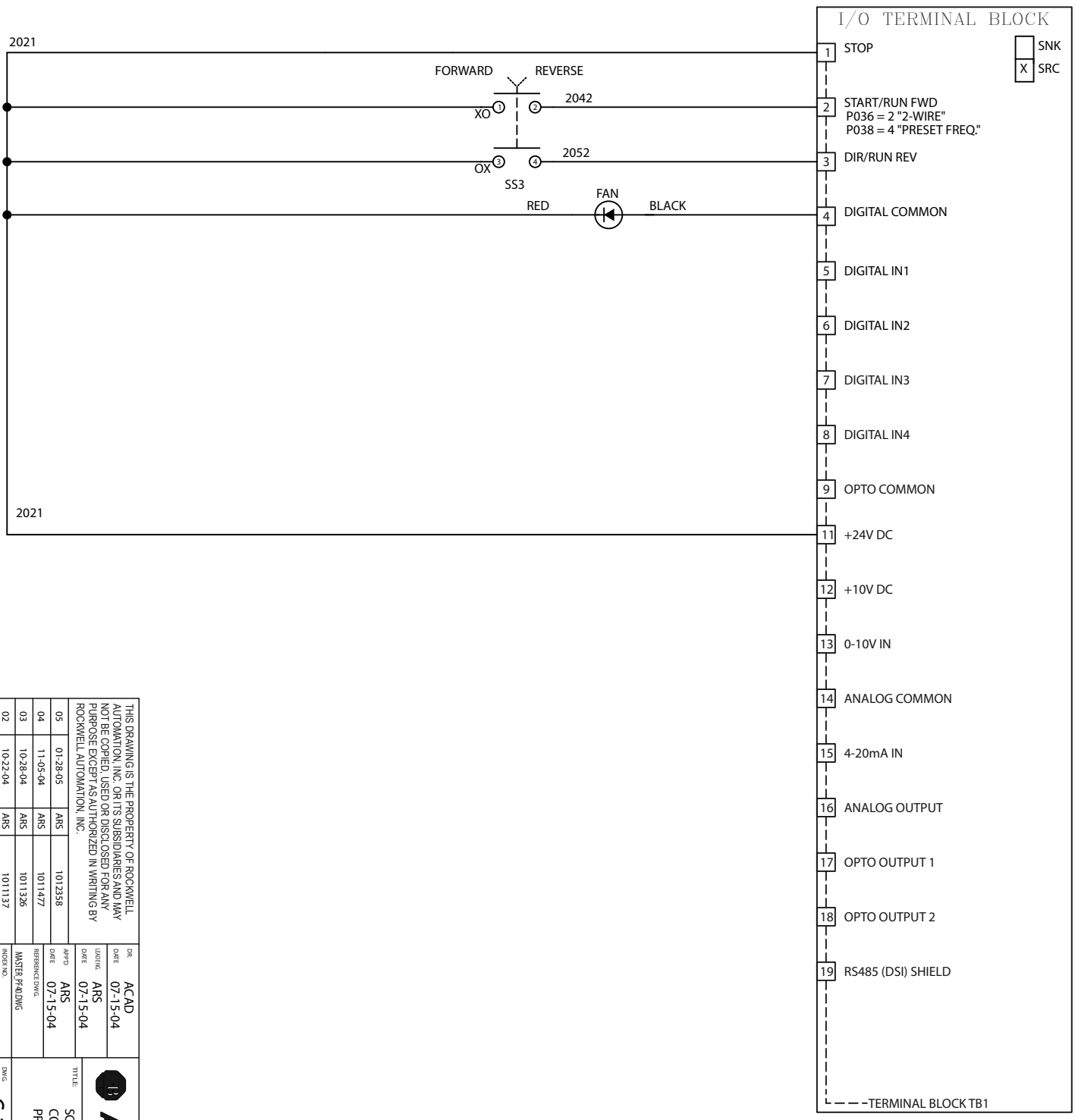

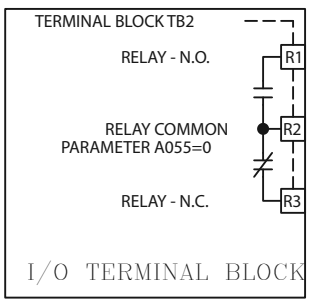

THIS DRAWING IS THE PROPERTY OF ROCKWELL AUTOMATION, INC. OR ITS SUBSIDIARIES AND MAY NOT BE COPIED, USED OR DISCLOSED FOR ANY PURPOSE EXCEPT AS AUTHORIZED IN WRITING BY ROCKWELL AUTOMATION, INC.

REV.	DATE	BY	ECN NUMBER
05	01-28-05	ARS	1012358
04	11-05-04	ARS	1011477
03	10-28-04	ARS	1011326
02	10-22-04	ARS	1011137

DR. ACAD DATE 07-15-04
LEADENG. ARS DATE 07-15-04
APP'D ARS DATE 07-15-04
REFERENCE DWG. MASTER_PF40.DWG
INDEX NO. WS/STD/349932/02-11

Allen-Bradley Rockwell Automation

TITLE: SCHEMATIC, POWERFLEX 40 AC DRIVE
CONTROL LOGIC OPTION S8
PROJECT: DRIVE

DWG. NO. C-349932-2

SH. 11
NEXT SH. 12